Driveway Authorisation
General Conditions

G1. Indemnification and Release

1.1 The Applicant agrees to indemnify the Council from and against all actions, costs, claims and damages, which may be brought or claimed against the Council arising out of or in relation to the granting of this Authorisation.

1.2 The Applicant agrees to release the Council from any liability or claim resulting directly or indirectly from any accident, damage or injury occurring from the Applicant's alteration to or use of the Road.

1.3 The Applicant agrees that the Council will have no responsibility or liability for any loss or damage to any of the Applicant's goods and property located on or adjacent to the Road pursuant to this Authorisation.

G2. Public Road Insurance

The Applicant must take out and keep current during the time of works, a public risk insurance policy. The policy must insure for the minimum amount of TWENTY MILLION DOLLARS ($20,000,000) per claim or such amount as the Council reasonably requires from time to time and must cover injury, loss, or damage to persons or property arising directly or indirectly from the Applicant's alteration of the Road.

G3. Disclosure and Evidence of Policy

3.1 The policy must bear an endorsement from the Insurer indicating the Insurer accepts the indemnity given by the Applicant.

3.2 A copy of the policy and evidence of payment of the premium must be provided to Council before the Authorisation is effective.

G4. Transfer of Authorisation

This Authorisation is not transferable.

G5. Compliance with Statutory Requirements

5.1 The Applicant must comply with any Act of Parliament, regulation or by-law relating to the use of the Road, including in particular, the *Disability Discrimination Act 1992* and the *Work, Health and Safety Act 2011.*

5.2 Wherever there is any cost involved in complying with the preceding requirement, the Applicant will be responsible for payment of those costs.

G6. Compliance with Direction of Government Department or Authority

6.1 The Structure and its construction shall not interfere with or cause damage to or affect in any way any wire, post, cable pipe or other thing the property of the SA Power Networks, Telstra, SA Water and/or United Water, Boral, Origin Energy

Limited or other Federal, State or Local government department or authority.

6.2 If any such damage does occur, the Applicant accepts total responsibility to the Council to make good any such damage.

G7. Execution of Authorisation

This Authorisation will not be effective until the Applicant has received a letter of Authorisation signed by Council's representative.

G8. Contractual Rights Only

This Authorisation does not confer on the Applicant any exclusive right, entitlement or interest in the Road or Council property.

G9. Safety

The Structure must be appropriately secured to ensure the safety of the public, in particular by the erection of warning bunting around the Structure during construction. Permanent Structures shall be constructed in accordance with the approved plans including all safety measures noted or otherwise reasonably required.

G10. Breach

10.1 If the Applicant breaches a provision of this Authorisation, the Council may give the Applicant written notice to remedy the breach and the notice will identify that failure to remedy the breach will result in cancellation of the Authorisation.

10.2 If the Applicant fails to remedy the breach with a time specified in the Council's notice, then the Council may cancel this Authorisation.

10.3 Council will provide reasonable amount of time consideration of the risk to the public and Council's liability in the matter to remedy the breach.

10.4 The Council will, within one month after receiving any representations pursuant to Clause 10.3 confirm in writing to the Applicant;

10.4.1 that the Council is satisfied by the Applicant's written representations that the breach can be remedied by the Applicant (to the Council's satisfaction) and this Authorisation will not be cancelled; or

10.4.2 that the Council will cancel this Authorisation effective on a date specified by the Council.

10.5 The Council may determine that the period allowed, under Clause 10.4 of this Authorisation, to the Applicant to make written representations to the Council on the proposed cancellation, shall be less than one (1) month to protect the health or safety of the public or otherwise to protect the public interest.

G11. GST

The amount payable for any supply made under or in accordance with the Authorisation after the introduction of the GST shall be increased by the GST imposed on or in respect of that supply. Supply means a taxable supply as defined in *A New Tax System (Goods and Services Tax) Act 1999*.

G12. Fees

12.1 The Applicant shall pay the fess specified in the Application.

12.2 The Applicant will pay any taxes, rates or charges levied by any government whether federal, state or local in respect of the location of the Structure on the Road.

G13. Interpretation

In this Authorisation reference to:

"the Application" means the Application that forms part of this Authorisation.

"the Council" includes its members, employees and agents;

"the Applicant" includes a natural person, a company and its employees, servants and agents;

"the Road" means that portion of the road identified in the Application.

"the Structure" means the vehicular driveway and gutter crossing to be installed pursuant to this Authorisation.

Driveway Specification

Driveway and Gutter Crossing Opening/Closing/Footpath Repair

Note: This specification is provided to assist people issued with Authorisations under Section 221 of the Local Government Act, to meet the construction requirements of Council in respect to the opening/closing or alteration of driveway gutter crossings and entries on public roads and repairing damaged caused to Council footpaths.

S1. Works on Council Land must be completed within twelve (12) months of application approval.

S2. The proposed replacement type and colour of surfacing material must be approved by Council.

S3. Where a new driveway and gutter crossing is constructed to replace an existing driveway and/or gutter crossing, the existing gutter crossing must be closed and the kerb, footpath and verge area reinstated, in accordance with this specification and in material technique as per adjacent infrastructure.

S4. Gutter crossings and driveway aprons may not be constructed within 10 metres of an intersection except with express approval of the Council.

S5. Other structures on the street (eg. trees, power poles, signs and services etc.) may not be moved, altered or interfered with in any way except with the express, written approval of the relevant authority and Council.

S6. The Applicant is responsible for locating any underground services prior to commencement of works. Any costs incurred in repairing damage to services are charged to the person responsible for the damage. Please contact the relevant service authority.

S7. Standard driveway apron width *across the verge area* should not exceed (unless otherwise approved):

- 4.5 m
- 6 m for shared driveway servicing multiple dwellings

S8. Maximum width (*length along the kerb*) of gutter crossings should not exceed (unless otherwise approved):

- 5.5 m
- 7 m for shared driveway servicing multiple dwellings

S9. Finished levels on driveways within 3 m of the gutter must be a minimum of 200 mm above the level of the adjacent gutter (for rain water control on low sides of the road). The cross slope of footpath portion of driveway apron must not exceed a 1 in 40 crossfall.

S10. The grade of the driveway must be no steeper than 1 in 5 slope (unless approved otherwise).

S11. Finished levels on driveways must match the existing footpath levels to ensure that there are no steps, depressions or other tripping hazards within the pedestrian walkway. If levels cannot be matched, the footpath alongside the driveway must be ramped at a slope no steeper than 1 in 40. Ramping of the footpath must be approved by Council.

S12. Council will determine the minimum distance required from the closest point of the driveway to a street tree. This will be informed by the species and size of street tree present. For new street tree plantings a minimum distance of 1.5 metres is required. A 1 metre clearance to stobie poles is required.

S13. Gutter crossing profile must conform to AS2876. Gutter crossing must be poured integrally with water table, ie. the entire kerb and water table must be excavated prior to construction. The practice of breaking away the top kerb section of existing integral kerb and water table is unacceptable.

S14. Concrete:

- Readymix must comply with AS1379 and have a minimum compressive strength of 20 Mpa, a maximum water/cement ratio of 0.5 or slump of 100 mm.
- Hand mix may not be used unless it complies with AS1480.
- Surface finish: gutter crossing – smooth steel trowel, driveway – broom finish or wood float. A smooth steel trowel finish is not acceptable on driveways.
- Colouring may be added in accordance with accepted concrete practices.
- Reinforcement is strongly recommended, however need not be provided except in accordance with Clause S17 below. Minimum thickness must be 100 mm except in accordance with Clause S17 below.

S15. Paving Bricks or Blocks:

- Bricks or blocks of minimum 60 mm thick only may be used, except for commercial driveways as per Clause S17 below.
- Bricks or blocks must be bedded in sand bedding minimum 20 mm thick spread on a base of compacted quarry rubble minimum 80 mm thick on driveways or 50 mm thick on footpaths.
- Edges must be restrained by a concrete plinth retainer in accordance with established good practice.
- Pavers shall match the colour and type of the existing footpath pavers if they are still available. Colour and type of pavers to be used shall be approved by Council.

S16. Hotmix:

- Minimum thickness 25 mm compacted, except in accordance with Clause S17 below.
- Hotmix must be laid at a temperature within 40°C of supply temperature and in accordance with established good practice.
- An approved bonding agent must be applied to base material and allowed to cure in accordance with supplier's recommendations, prior to laying.
- Base must be compacted quarry rubble minimum 80 mm thick except in accordance with Clause S17 below.

S17. Special Conditions on Non-Residential Properties:

- Concrete work: All concrete must be a minimum of 150 mm thick. F72 reinforcing mesh must be provided 50 mm above base of slab.
- Paving Blocks or Hotmix: Rubble base must be minimum 150 mm thick. Pavers must be minimum 80 mm thick. Hotmix must be minimum 40 mm compacted thickness.

S18. Protection of Works:

- During the progress of the work, the site must be protected by suitable safety barriers at all times in accordance with AS1742.3.
- If the works are left open overnight, in addition to the other safety items, at least one operating flashing amber safety light must be provided.
- Every attempt must be made to complete the work as quickly as possible.
- The site and adjoining roadway and footpath must be cleared of any excess material, spillage, form-work and tools as they accumulate.
- No material may be stockpiled on the road reserve, which includes road, footpath and verge.

S19. Satisfactory Completion:

- Any cost incurred by the Council in reinstating the road or footpath as a result of work done under this authorisation or work not completed in accordance with this authorisation that must be made good by Council, will be charged to the owner, pursuant to Section 213 of the *Local Government Act 1999.*
- Council, under the *Local Government Act 1999* has the right to rectify driveways and gutter crossings and recover costs if the construction does not conform to Council Standards.

S20. Basecourse and Sub base.

- Basecourse shall be thoroughly compacted (95% of test E2.1 of AS1289 to a thickness as specified in Table A). The materials used shall comply with DIT specification 20 mm crushed rock PM1/20 QC basecourse, 20mm rubble PM2/20 QG sub base course.

Concrete- Crossover & Invert				
Land use	**Bedding**	**Slab Thickness**	**Reinforcement**	**Concrete Strengths**
Residential	75 mm	100 mm	F62 Central	20 Mpa @ 28 Days
Commercial (Inc Car Parks)	150 mm	150 mm	F62 Central	20 Mpa @ 28 Days
Industrial	150 mm	150 mm	F62 Top and Bottom	20 Mpa @ 28 Days

Concrete Block Pavers				
Land use	**Base Material**	**Bedding**	**Paving**	**Colour**
Residential	80 mm	20 mm sand	Rectangular BP60 220 mm x 110 mm	Best Brick & Paving - Claret
Commercial (Inc Car Parks)	150 mm	20 mm sand	Rectangular BP80 220 mm x 110 mm	Best Brick & Paving - Claret
Industrial	150 mm	20 mm sand	Rectangular BP80 220 mm x 110 mm	Best Brick & Paving - Claret

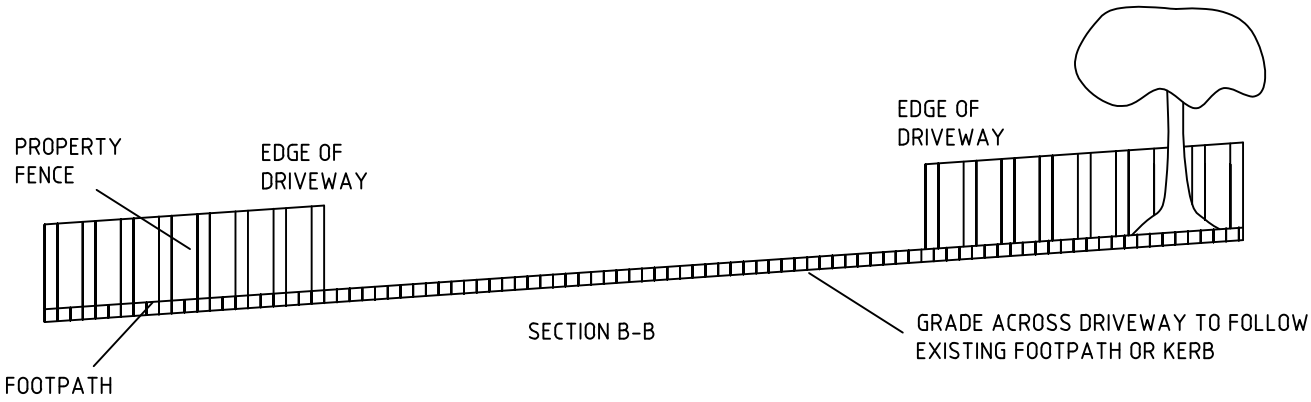

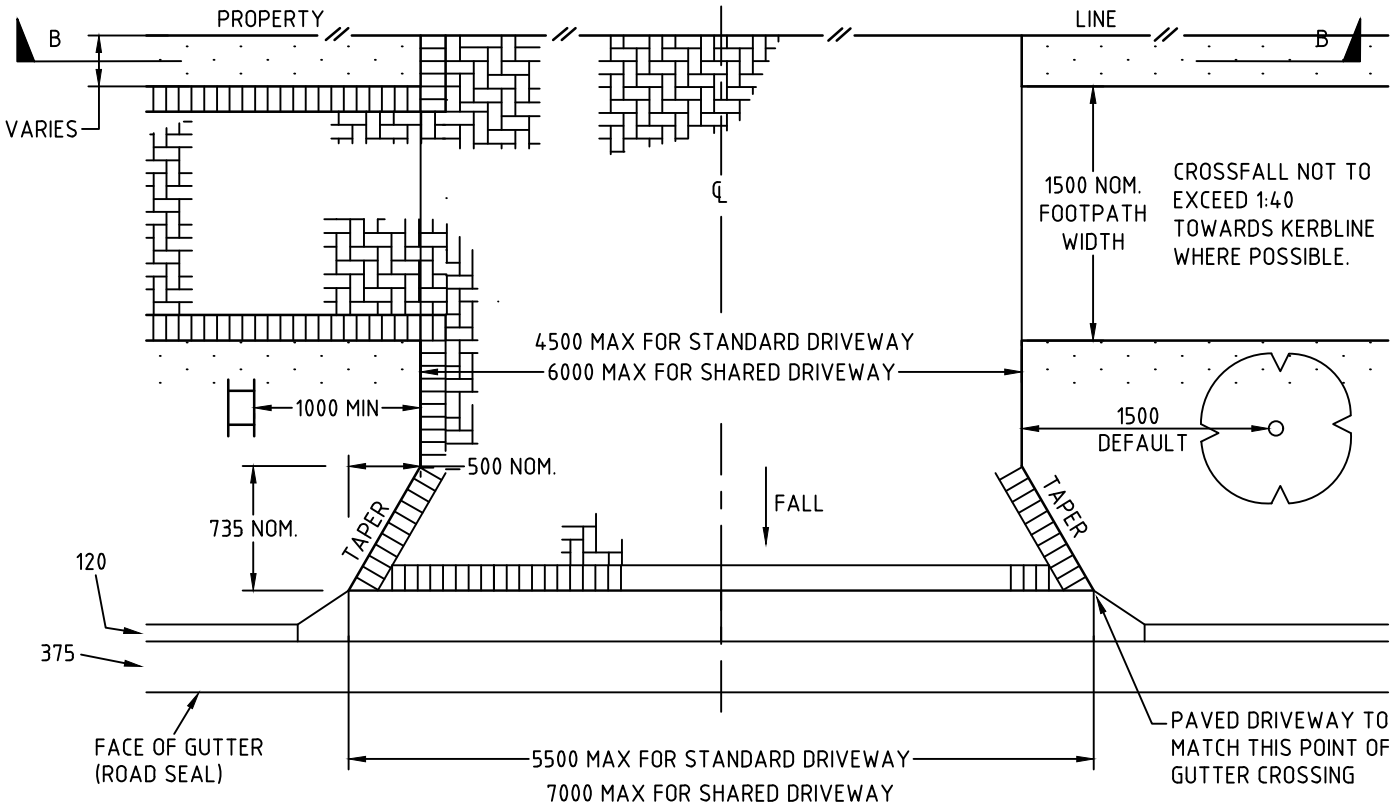

NOTES:
1. NOMINAL DIMENSIONS GIVEN MAY BE VARIED TO SUIT PAVER DIMENSIONS
2. VARIATIONS TO PLACEMENT OF GUTTER CROSSINGS CONSIDERING EXISTING FEATURES SUCH AS TREES, PITS, STOBIE POLES ETC. TO BE CONFIRMED WITH THE ASSETS AND CAPITAL WORKS DEPARTMENT
3. ALL DIMENSIONS ARE IN MILLIMETRES

REV.	DRN.	DATE	COMMENTS	APP'D.
C	A.S.	08/23	FOOTPATH CROSSFALL DETAILS	11/08/2023
B	J.H.	09/10	GENERAL CHANGES AND ADDITIONS	17/01/2011
A	J.W.	10/07	AS SHOWN [A]	

City of Burnside
ASSETS AND CAPITAL WORKS PH 8366 4266 FAX 8366 4279

DEFAULT DRIVEWAY CONSTRUCTION STANDARDS

APPROVED	DATE	DRAWN	DATE	SCALE	DWG NO.
MANAGER, ASSETS AND CAPITAL WORKS		DORRESTYN & CO	AUGUST 1997	NTS	D4274-1-B

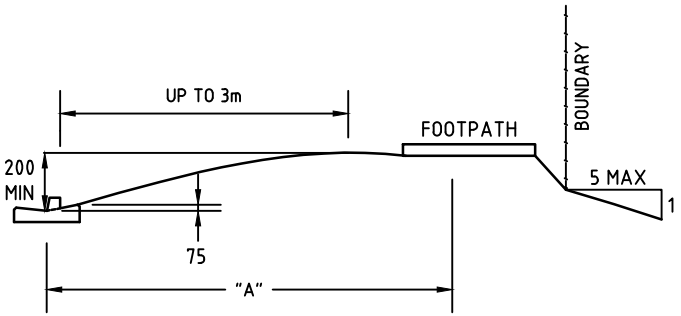

SECTION THROUGH DRIVEWAY
ON LOWER SIDE OF ROAD

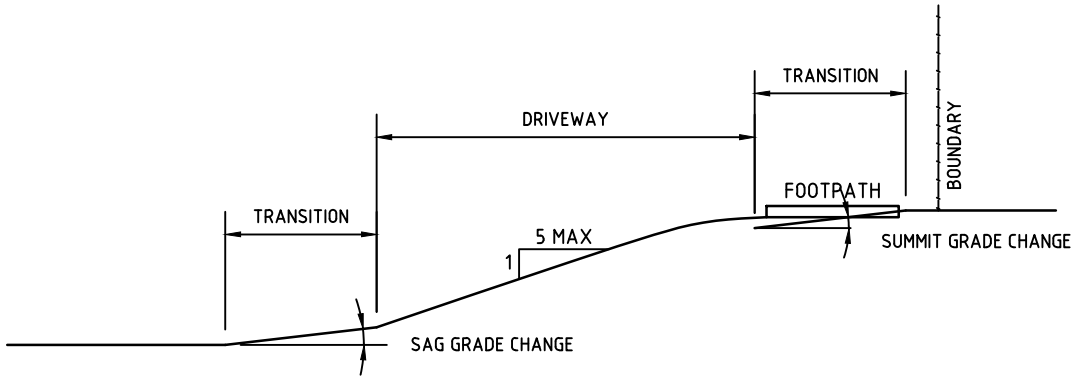

SECTION THROUGH DRIVEWAY
ON HIGHER SIDE OF ROAD WITH FOOTPATH

NOTE:
1) CHANGES OF GRADE - TO PREVENT VEHICLES SCRAPING OR BOTTOMING IN EXCESS OF -
(i) 12.5% ALGEBRAICALLY FOR SUMMIT GRADE CHANGES
(ii) 15.0% ALGEBRAICALLY FOR SAG GRADE CHANGES
INTRODUCE A GRADE TRANSITION BETWEEN THE MAIN GRADE LINES AS SHOWN.

2) GRADE TRANSITIONS - TRANSITION OF 2.0M IN LENGTH WILL USUALLY BE SUFFICIENT TO CORRECT SCRAPING OR BOTTOMING

3) "A" TRANSITION LENGTH VARIES UP TO 4000 DEPENDING ON GRADE

4) FOOTPATH CROSSFALL NOT TO EXCEED 1:40

City of Burnside	SCALE Horiz. NTS Vert. ——		Manager Assets & Capital Works
DEFAULT DRIVEWAY GRADE STANDARDS	SURVEYED		
	DRAWN	J.W.	08/23
	DESIGNED	A.S.	08/23
	CHECKED	A.S.	08/23
			D4274-19

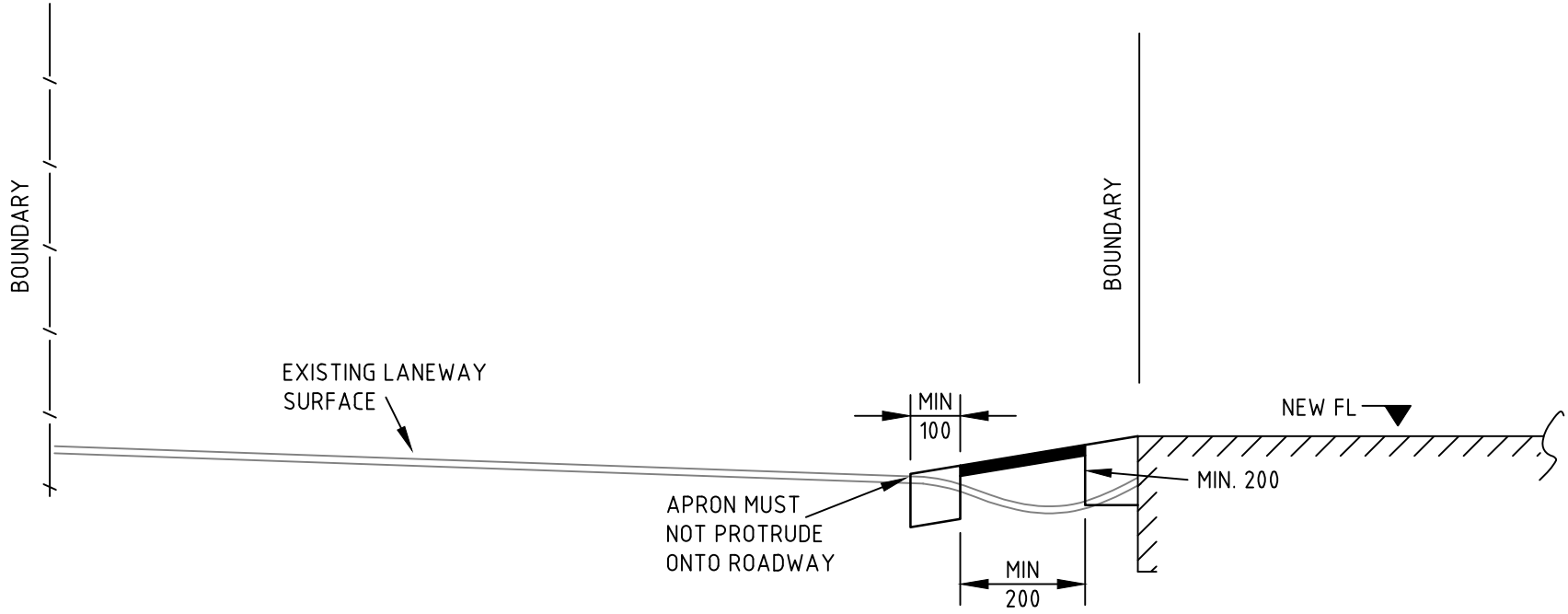

NOTE:
1) CONCRETE RAMP, LOCATION AND DIMENSIONS TO BE SPECIFIED BY CERTIFIED ENGINEER ENGAGED BY THE RESIDENT-OWNER AND INCLUDED IN THE APPLICATION.

NEW CONCRETE RAMP IN A LANEWAY - SECTION

City of Burnside	SCALE	Horiz. NTS Vert. ——		Manager Assets & Environment
DEFAULT DRIVEWAY RAMP IN LANEWAY	SURVEYED			D4274-1H
	DRAWN	J.W.	08/23	
	DESIGNED	C.P.	08/23	
	CHECKED	D.H.	08/23	